Agglomeration, Deposition, and Aggregation

Lecture 9

ACS© 2005

Theoretical principles

Sphere-sphere interaction

Electrostatic repulsion:

$$\frac{2\pi a_1 a_2 n_\infty kT}{(a_1+a_2)\kappa^2}\left(\Phi_1^2+\Phi_2^2\right)\left[\frac{2\Phi_1\Phi_2}{\Phi_1^2+\Phi_2^2}\ln\left(\frac{1+e^{-\kappa h}}{1-e^{-\kappa h}}\right)-\ln\left(1-e^{-2\kappa h}\right)\right]$$

Dispersion force attraction:

$$-\frac{A a_1 a_2}{6h(a_1+a_2)}$$ Sphere-sphere

$$-\frac{A}{6}\left[\frac{a}{h}+\frac{a}{h+2a}+\ln\left(\frac{h}{h+2a}\right)\right]$$ Sphere-plate

Small Φ_i	Small surface potentials
$h \ll a_i$	Particles close together
$\kappa a_i \gg 1$	Particles large compared to double layers

Elimelech et al, Tables 3.2 & 3.3

Colloidal hydrodynamics

Dispersion attraction and electrostatic repulsions are short range (order of the particle size.)

The processes that bring particles together are:

- Brownian motion
- Frictional drag of fluid motion
- Motion of one particle affecting another
- External forces – e.g. gravity, centrifugation, electric fields

Brownian Motion is diffusion

The Einstein relation between particle size and its diffusion coefficient is:

$$D = \frac{kT}{6\pi\eta a}$$

However gravitational sedimentation tends to pull the particle to the bottom. When these two tendencies are in equilibrium, the concentration of particles is given by:

$$n = n_o \exp(-h / h_0)$$

$$h_0 = \frac{3kT}{4\pi a^3 \Delta\rho g}$$

For a 500 *nm* radius particle, 2 gm/cm^3 in water at 25°C, h_0 is about 1000 *nm*.

But Brownian motion is not the source of dispersion stability.

D is the diffusion constant
k is the Boltzmann constant
T is temperature
η is viscosity
a is particle radius
n is particle concentration
n_0 is the particle concentration at the bottom
h is the height
h_0 is the characteristic height
$\Delta\rho$ is the particle-liquid density difference
g is the gravitation constant

Frictional drag of fluid motion

The ratio of inertia to viscous drag is the Reynolds number:

$$R_e = \frac{\rho L_0 U_0}{\eta}$$

where ρ is the density difference

L_0 is a characteristic length

U_0 is the local velocity

η is the viscosity

A Reynolds number less than one means the flow is laminar.

The Reynolds number is always small for submicron particles.

Convection versus Diffusion

The Peclet number is the relative strength of convection and Brownian diffusion:

$$Pe = \frac{U_0 a}{D_0}$$

where U_0 is the velocity

a is the particle radius

D is the diffusion constant

The velocity has been calculated for flows near collectors: a rotating disc, a stagnation-point flow, a plate in uniform flow … (Table 4.1 in Elimelech et al.)

Concentration dependence

The viscosity for hard spheres with no charge:

$$\eta = \eta_0 \left(1 + 2.5\Phi\right)$$

where η_0 is the solvent viscosity

and Φ is the volume fraction of particles

For hard spheres with low charge:

$$\eta = \eta_0 \left[1 + \left(2.5 + \frac{6\varepsilon^2 \varepsilon_0^2 \zeta^2}{\lambda \eta a^2} \right) \Phi \right]$$

where ε is the dielectric constant of the liquid

ε_0 is the permittivity of free space

ζ is the zeta potential of the particles

λ is the specific conductivity

Trends in the diffusion coefficient

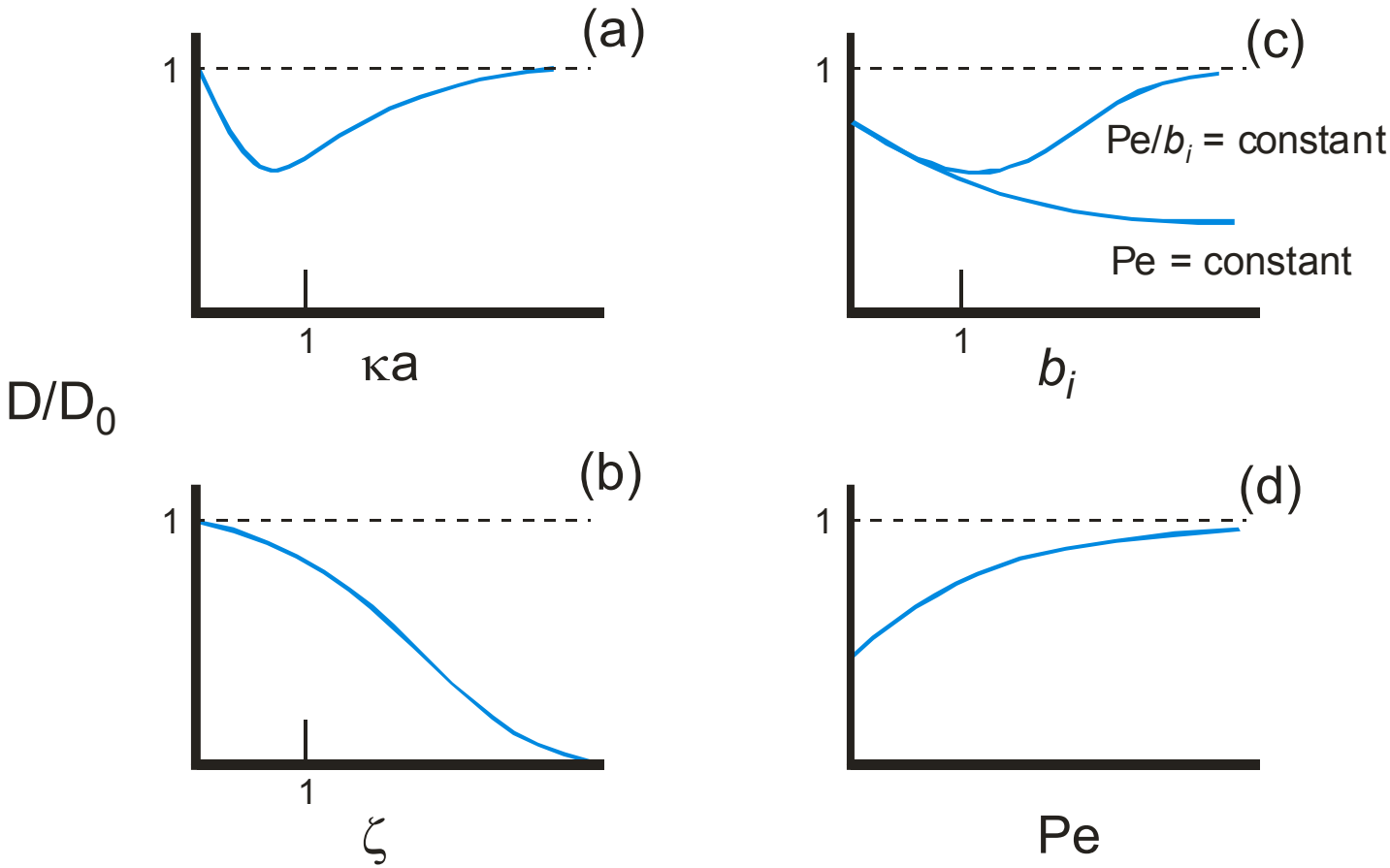

(a) Ionic strength, (b) zeta potential, (c) ion size, (d) fluid velocity

van de Ven, p.89.

Characteristic times and forces

Characteristic times (seconds)

Force	Time scale	Sphere radius 10^{-2} μm	Sphere radius 1 μm
Brownian	a^2 / D	10^{-6}	10
Viscous	$\rho a^2 / \eta$	10^{-10}	10^{-6}
Convection	a / U	10^{2}	1

Characteristic forces (N/m^2)

Force	Force scale	Sphere radius 10^{-2} μm	Sphere radius 1 μm
Brownian	kT/D	10^{-13}	10^{-15}
Viscous	$6\pi\eta aU$	10^{-20}	10^{-14}
Dispersion	A/a	10^{-12}	10^{-14}
Electrostatic	$\varepsilon\varepsilon_0\zeta_0^2$	10^{-12}	10^{-12}

$a =$ sphere radius
$D =$ Diffusion coefficient
$\rho =$ density
$\eta =$ viscosity
$U =$ fluid velocity
$kT =$ Boltzmann factor
$A =$ Hamaker constant
$\varepsilon =$ dielectric constant
$\varepsilon_0 =$ permittivity of free space
$\zeta_0 =$ zeta potential

Russel, pp 9-12.

Models

Ideal collectors: measures of particle interactions

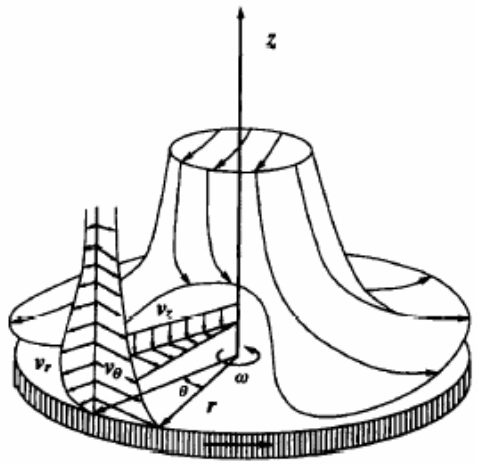

Figure 5.1 *A schematic description of the flow near a disc rotating in a fluid at rest (adapted from Schlichting, 1960). The fluid velocity components are: radial = v_r; tangential = v_θ; and axial = v_z*

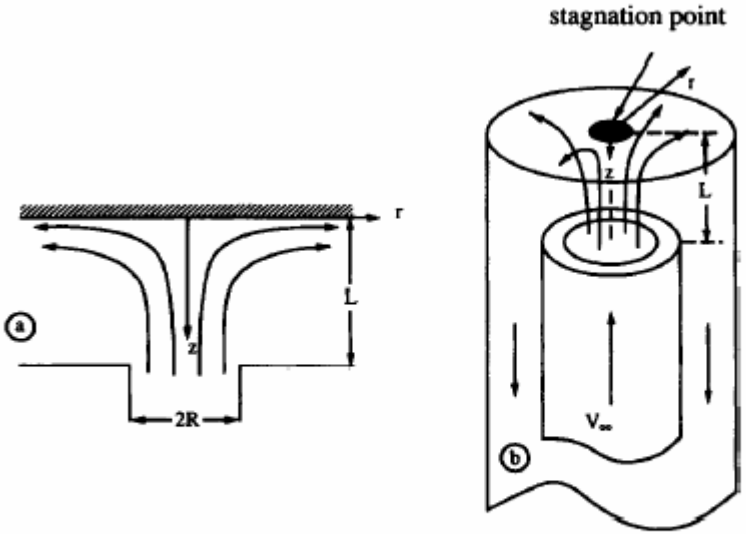

Figure 5.3 (a) *A schematic representation of the fluid streamlines and coordinate system of a stagnation-point flow system.* (b) *The impinging jet system for an axisymmetrical flow. Adapted from Adamczyk* et al. *(1986)*

The hydrodynamics of the rotating disk is relatively simple.

Particles gather at the center, top of the stagnation-point collector

The goal is to deduce the magnitude of colloidal forces. Typical experiments vary zeta potentials and ionic strengths.

Elimelech, p. 116-133.

Perikinetic flocculation (1): Driven by Brownian motion

$J_{ij} = k_{ij} n_i n_k$ is the number of collisions per unit volume and time

$$k_{ij} = \frac{2kT}{3\eta} \frac{\left(a_i + a_j\right)^2}{a_i a_j}$$ second order rate constant

where kT is the Boltzmann factor

η is the viscosity

a_i and a_j are the particle radii

Different sized particles flocculate faster.

Perikinetic flocculation (2): Driven by Brownian motion

For equal sized particles and interaction potential *U*:

$$n = \frac{n_0}{1 + \frac{4kT}{3\eta W} n_0 t}$$

is the particle concentration

$$t_{1/2} = \frac{3\eta W}{4kTn_0} = \frac{\eta \pi a^3 W}{\Phi kT}$$

is the half-life

$$W = 2a \int_0^\infty \exp\left(\frac{U(H)}{kT}\right) \frac{dH}{H^2}$$

is the *Stability Ratio*

Orthokinetic agglomeration: Collisions by fluid motion

With laminar flow, shear rate = G

$$n = n_0 \exp\left(\frac{-4G\Phi}{\pi} t\right)$$

For turbulent flow, an model based on power input gives:

$$\bar{G} = \sqrt{\frac{\varepsilon\rho}{\eta}}$$

where ε is the power input per unit mass

ρ is the fluid density

η is the fluid viscosity

A comparison of rates (1)

Perikinetic $$k_{ij} = \frac{2kT}{3\eta}\frac{\left(a_i + a_j\right)^2}{a_i a_j}$$

Orthokinetic $$k_{ij} = \frac{4}{3}G\left(a_i + a_j\right)^3$$

Differential settling $$k_{ij} = \left(\frac{2\pi g}{9\eta}\right)\left(\rho_s - \rho\right)\left(a_i + a_j\right)^3\left(a_i - a_j\right)$$

where g is gravitational acceleration

ρ_s is the particle density

ρ is the liquid density

A comparison of rates (2)

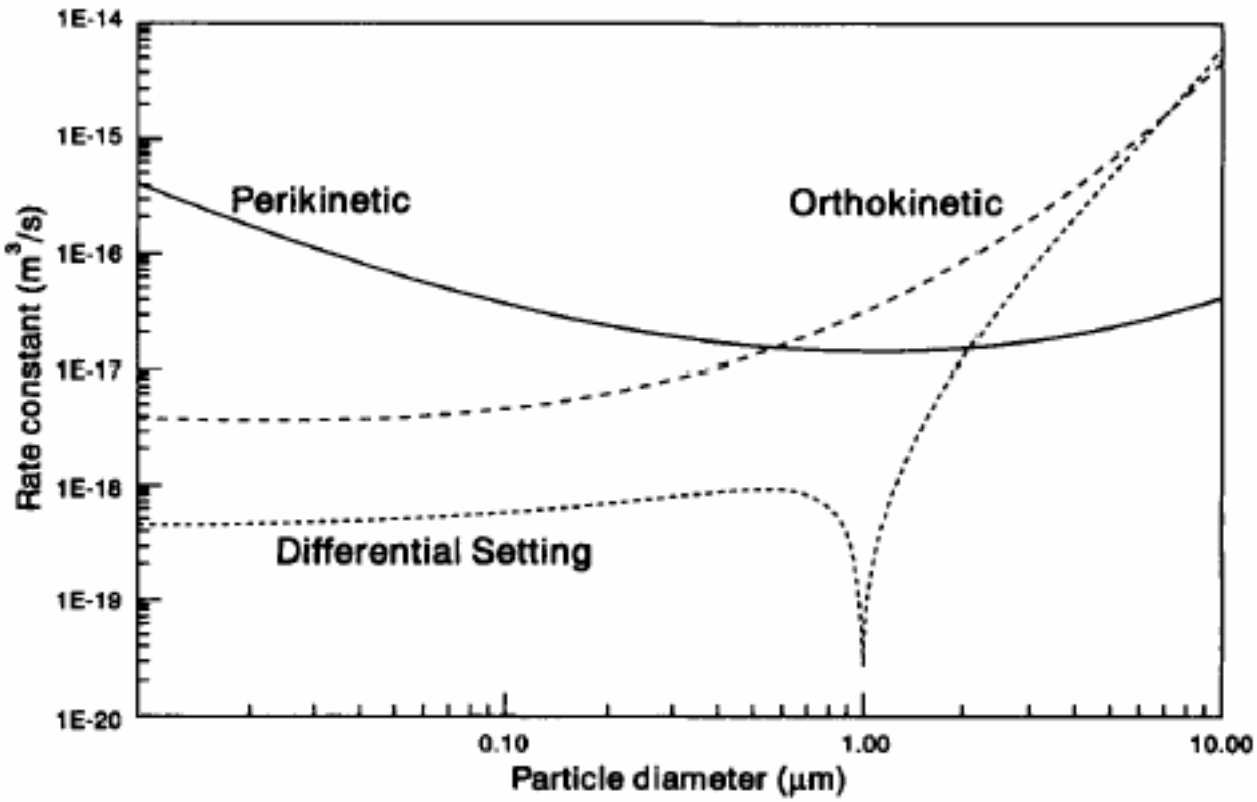

Figure 6.3 *Comparison of collision rate constants for different transport mechanisms (see text)*

Elimelech, p. 170.

Mechanisms of flocculation

- Charge neutralization
  (Ion adsorption, pH change, charged polymers)
- Double layer compression (ccc)
- Irregular charge distribution
- Polymer insolubility
  (temperature or solvent composition)
- Desorption of polymer
- Polymer bridging

Polymer Flocculants

Add a polymer that will "bridge" between two particles:

If a polymer is adsorbed and if the particles are not completely covered, then the polymer acts as a flocculant!

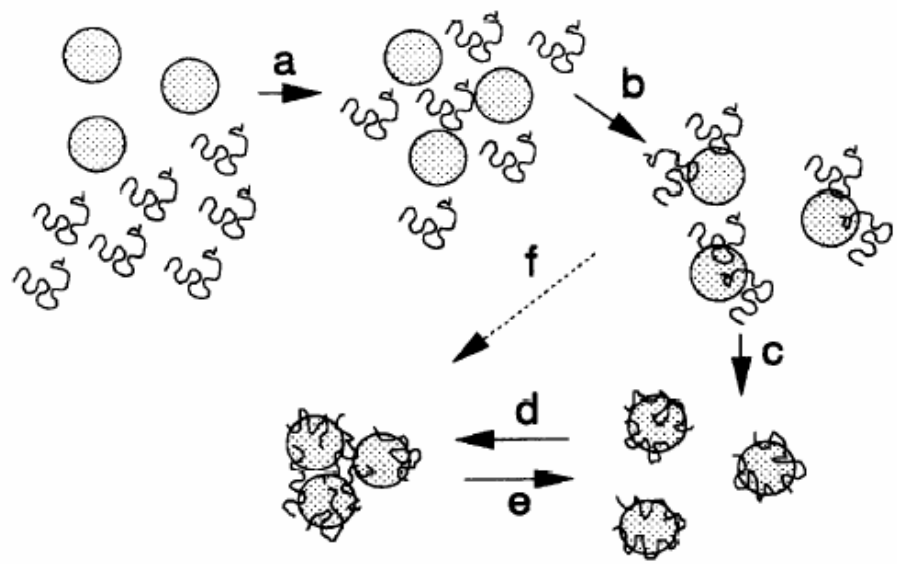

Figure 6.13 *Schematic illustration of the stages involved in the flocculation of a suspension by added polymer:* (a) *mixing of polymer chains among the particles;* (b) *adsorption of polymer;* (c) *re-conformation of adsorbed chains;* (d) *flocculation; and* (e) *break-up of flocs. The dashed arrow,* (f) *shows the possibility of bridging flocculation before the adsorbed chains have reached their equilibrium conformation*

The efficiency of flocculation goes roughly as $\approx \Theta(1-\Theta)$

If the coverage is large, the polymer acts as a stabilizer.

Elimelech, p. 194.

Adsorption at a solid surface is a slow process

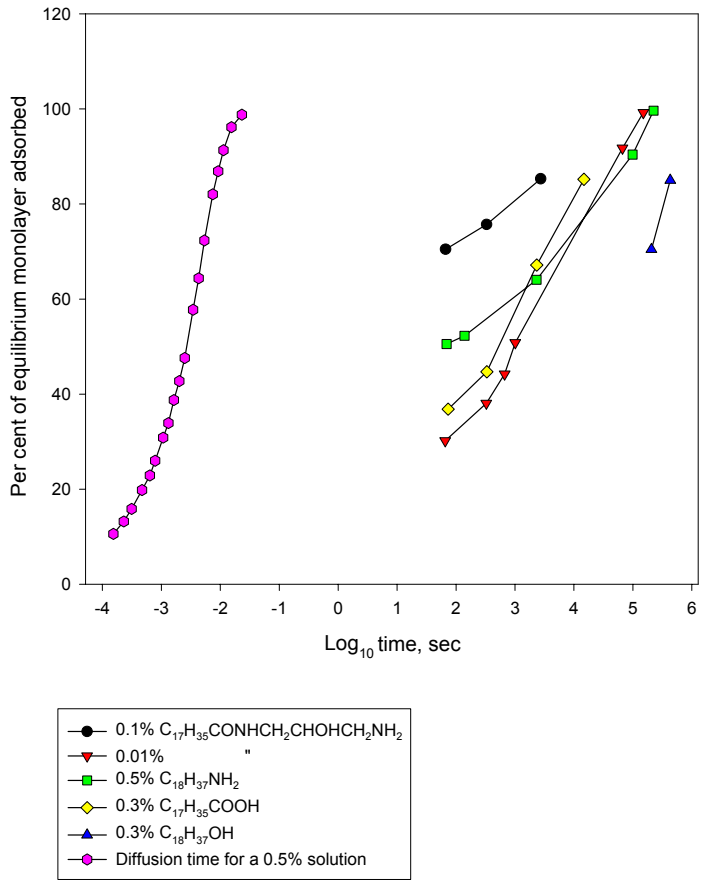

The adsorption of surfactants is much! slower than is estimated by molecular diffusion.

Time is required for molecules to rearrange at the solid/liquid interface.

Experimental methods

Measure particle size distributions*

Want number distributions for understanding.

Therefore any technique that “counts”:

- Microscopy
- Sensing zones (optical and electrical)

Light scattering:

- Rayleigh scattering – get weight average, if small
- Mie scattering – not practical
- QELS – only very dilute, get weight average and 1st moment
- Fraunhoffer – most practical but not accurate

Sedimentation:

- Easy but tricky data analysis
- Hindered settling is an issue
- Measure concentration as a function of height

*Much easier said then done!

Measure particle deposition rates

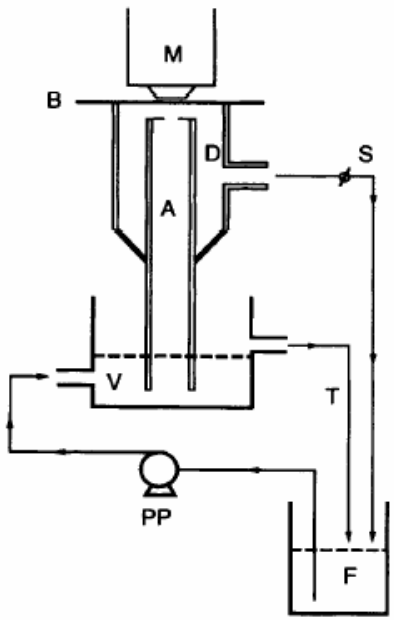

Rotating disk: Particles are collected on a microscope coverglass attached to disk *G* and counted after removal from tank.

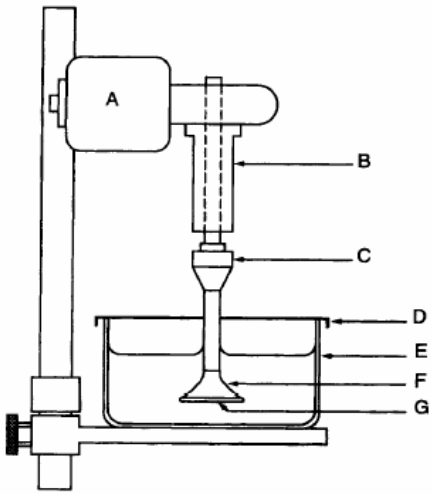

Figure 10.4 *A schematic description of a rotating disc apparatus (adapted from Marshal and Kitchener, 1966). The various components of the system are: (A) constant-speed motor; (B) roller bearing; (C) collet chuck; (D) cover; (E) glass container with particle suspension; (F) plastic disc; and (G) deposition surface*

Stagnation-point flow: Observation is on *B* of the liquid flowing up through tube *A*.

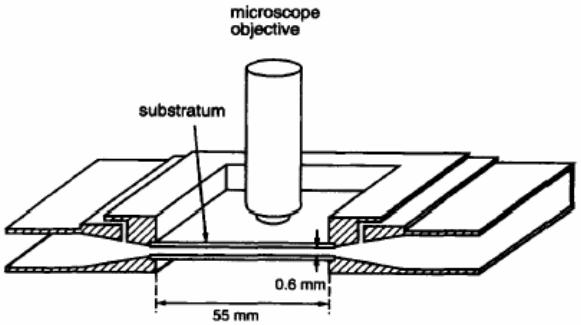

Parallel-plate channel: Particles deposited as a function of time can be seen from either side with a microscope.

Elimelech, pp 296-303

Bibliography

Elimelech, M.; Gregory, J.; Jia, X.; Williams, R.A. *Particle deposition & aggregation*; Butterworth-Heinemann: Oxford; **1995**.

Krotov, V.V.; Rusanov, A.I. *Physicochemical hydrodynamics of capillary systems*; Imperial College Press: London; **1999**.

Levich, V.G. *Physicochemical hydrodynamics, 2nd ed.*; Prentice-Hall: New Jersey; **1962**.

Russel, W.B. *The dynamics of colloidal systems*; University of Wisconsin Press: Madison; **1987**.

van de Ven, T.G.M. *Colloidal hydrodynamics*; Academic Press: New York; **1989**.